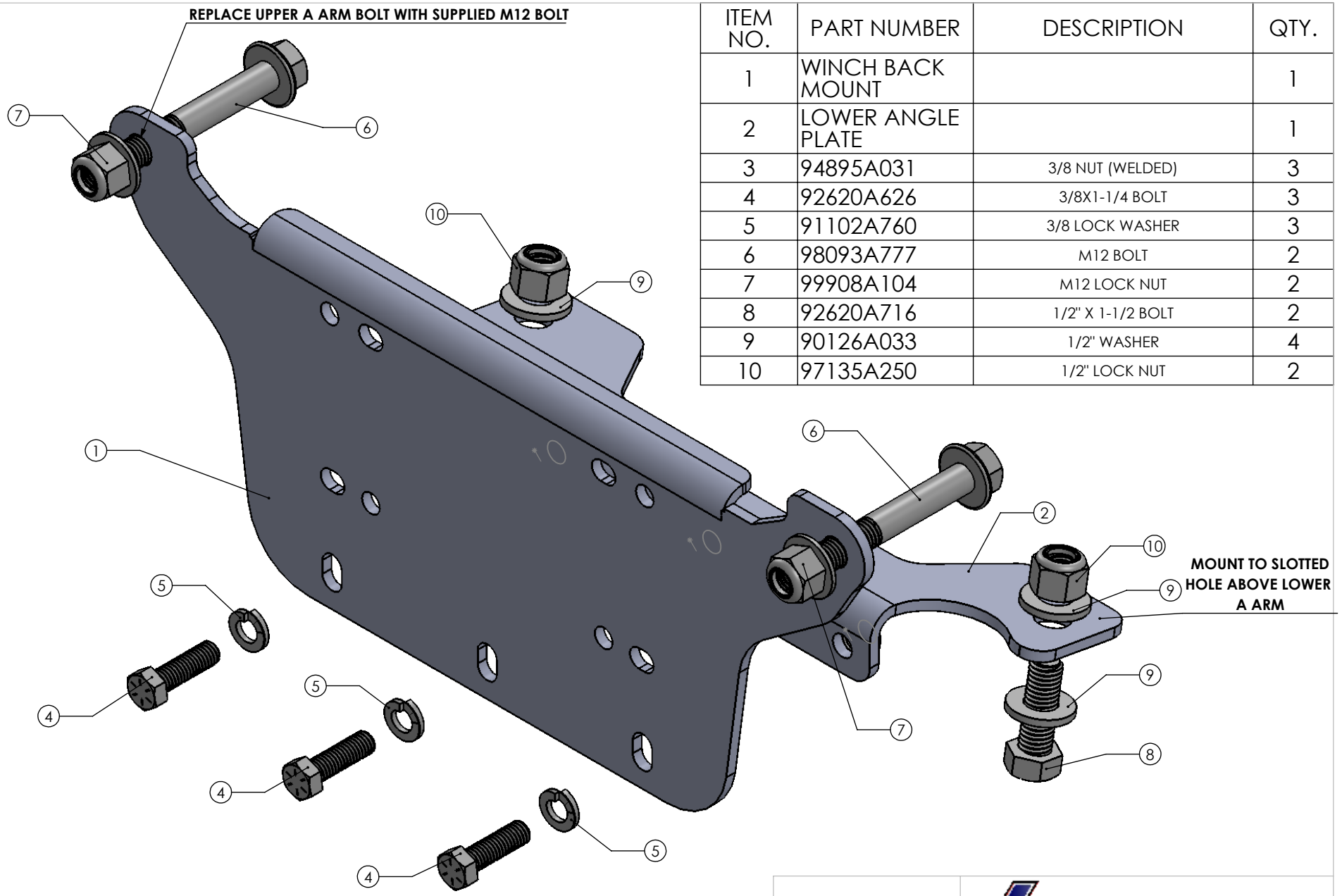

ITEM NO.	PART NUMBER	DESCRIPTION	QTY.
1	WINCH BACK MOUNT		1
2	LOWER ANGLE PLATE		1
3	94895A031	3/8 NUT (WELDED)	3
4	92620A626	3/8X1-1/4 BOLT	3
5	91102A760	3/8 LOCK WASHER	3
6	98093A777	M12 BOLT	2
7	99908A104	M12 LOCK NUT	2
8	92620A716	1/2" X 1-1/2 BOLT	2
9	90126A033	1/2" WASHER	4
10	97135A250	1/2" LOCK NUT	2

LEAVE ALL BOLTS LOOSE AND TIGHTEN IN FOLLOWING ORDER:

1- TIGHTEN THE UPPER M12 BOLTS GOING THROUGH A ARM TO WINCH MOUNT
2-TIGHTEN THE 3 LOWER 3/8 BOLTS TO THE LOWER ANGLE PLATE
3-TIGHTEN THE 2 1/2" BOLTS IN THE LOWER ANGLE TO SLOTTED HOLES ABOVE LOWER A ARM

UNLESS OTHERWISE SPECIFIED:

DIMENSIONS ARE IN INCHES
TOLERANCES:
FRACTIONAL ± 1/16
ANGULAR: MACH ± 1. BEND ±.5
TWO PLACE DECIMAL ±.01
THREE PLACE DECIMAL ±.005

MATERIAL

DRAWN: CHET G.

TITLE:

WINCH MOUNT ASSEMBLY INSTRUCTIONS

SCALE: 1:5 WEIGHT: SHEET 1 OF 1

5 3 2 1